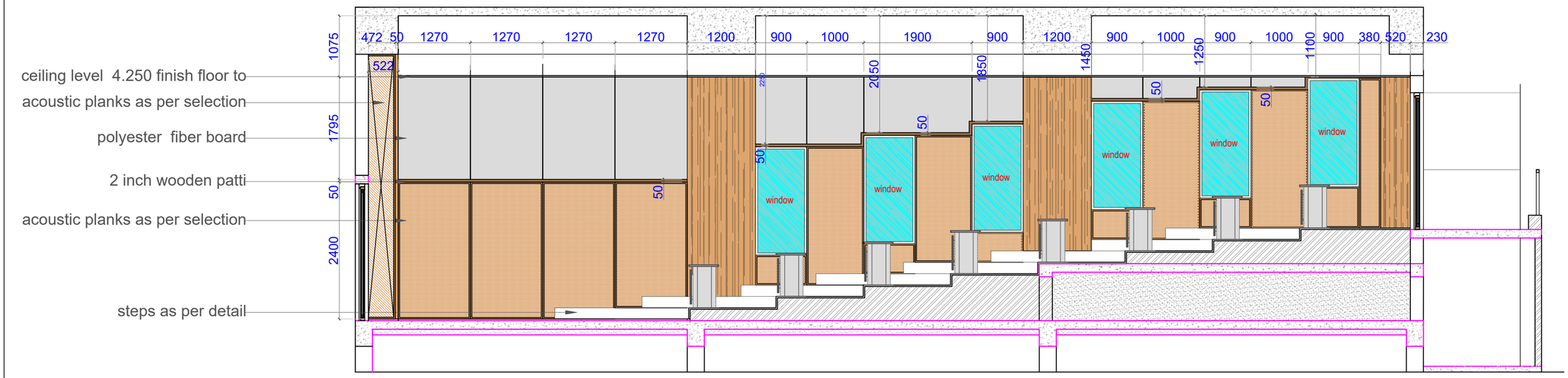

SECTIONAL ELEVATION A-A

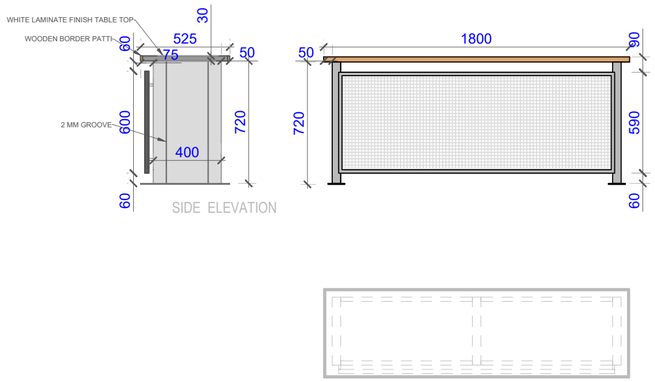

SIDE ELEVATION

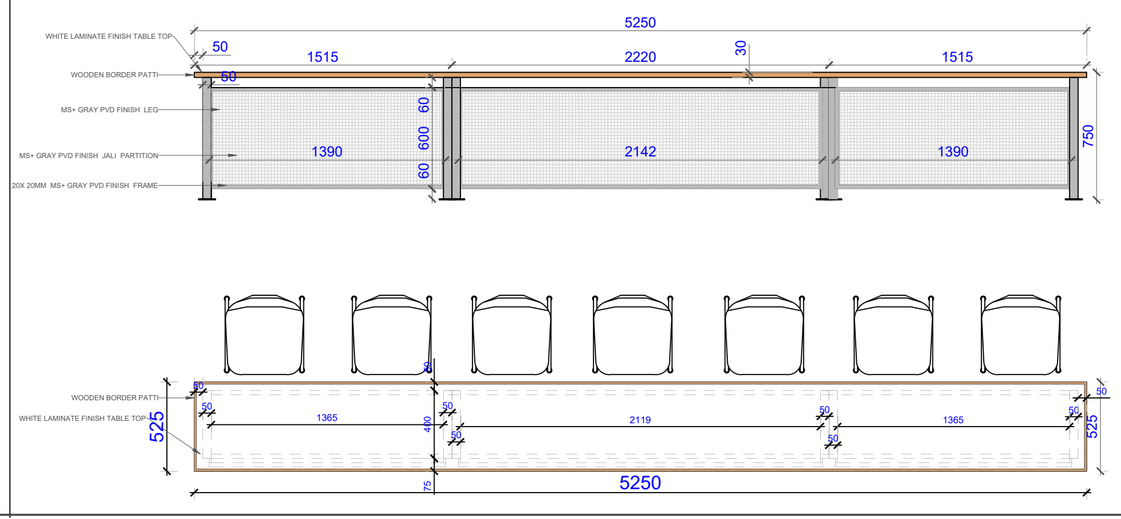

ACOUSTIC DOOR DETAIL DRAWING

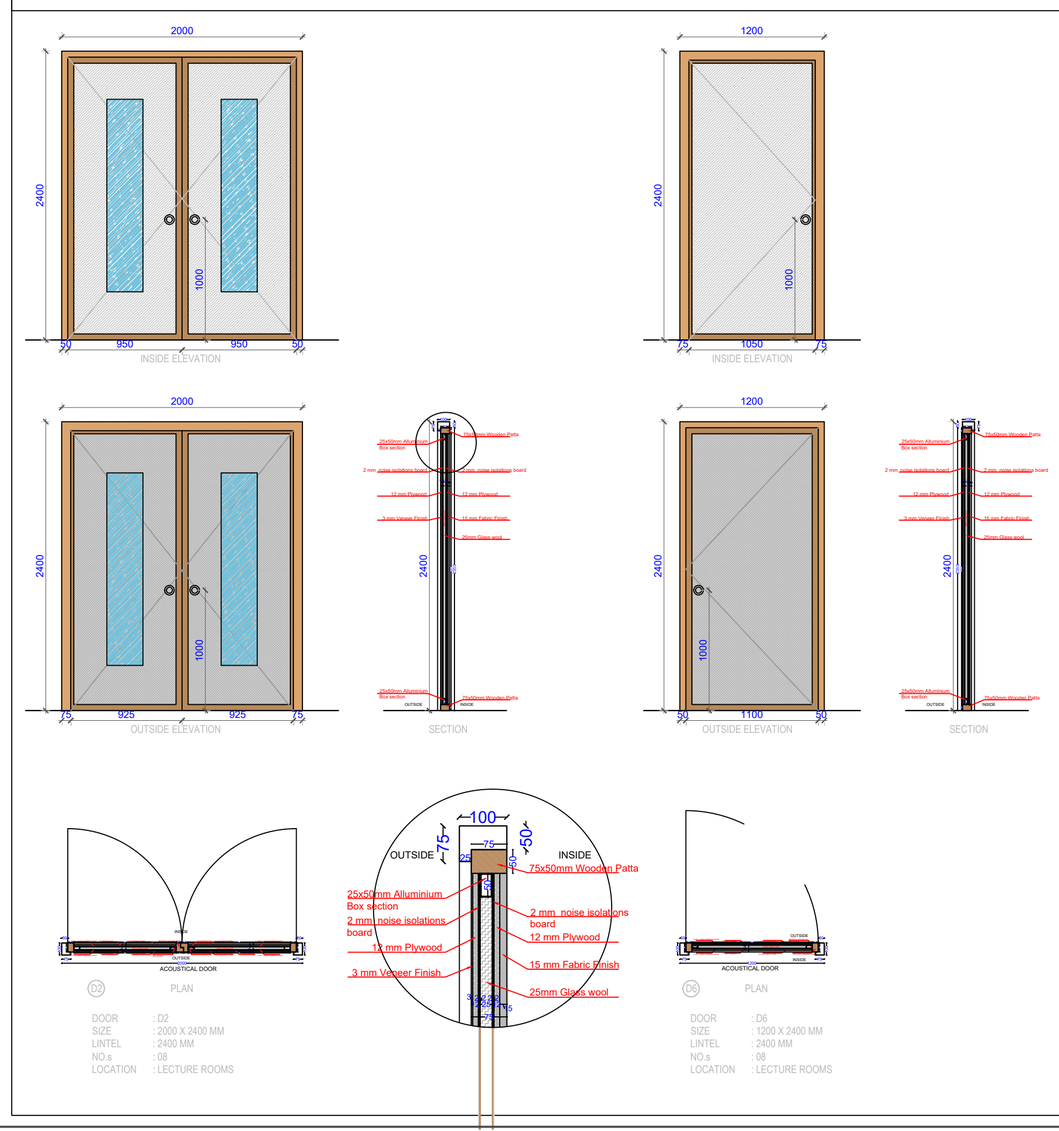

KEY PLAN:

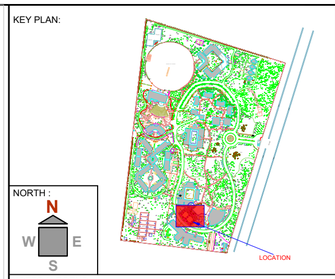

NORTH :

N W E S

NOTES / LEGEND:

GENERAL NOTES:

1. ALL DIMENSION ARE IN MILLIMETERS UNLESS OTHERWISE SPECIFIED. ONLY WRITTEN DIMENSION TO BE FOLLOW.
2. LAYOUT IS SUBJECT TO MINOR MODIFICATION AS PER SITE CONDITION

DOOR SCHEDULE

DOOR	SIZE	LINTEL	NO.s
D1	3000 X 2400	2400	2
D2	2000 X 2400	2400	8
D3	1050 X 2400	2400	6
D4	750 X 2400	2400	12
D5	1050 X 2100	2100	4
D6	1200 X 2400	2400	8

WINDOW SCHEDULE

WINDOW	SIZE	SILL	LINTEL	NO.s
W1	750 X 1900	900 (From finished ship M.)	Varies	24
W2	3000 X 1500	900	2400	4
W3	1310 X 1500	900	2400	4
W4	1050 X 1500	900	2400	4

VENTILATION SCHEDULE

WINDOW	SIZE	SILL	LINTEL	NO.s
V1	600 X 600	1800	2400	8

REV.	DATE	DESCRIPTION	DRN.	CKD.	APD.
R1	15/05/2026	FOR REVIEW	PV	DC	AT
R0	31/03/2026	FOR REVIEW	PV	DC	AT

REVISION

GOOD FOR CONSTRUCTION

CLINT

DHIRUBHAI AMBANI INSTITUTE OF INFORMATION & COMMUNICATION TECHNOLOGY, GANDHINAGAR.

ARCHITECT

ANAND TATU
ARCHITECTS | URBAN PLANNERS | INTERIOR DESIGNERS
301, MARUTI ARCADE, SHIVRANJANI CROSS ROADS,
132' RING ROAD, SATELLITE, AHMEDABAD - 380 015
GUJARAT, INDIA.
PH : 079 35517929, EMAIL : anandtatu@gmail.com

Consultant

DRG. NAME: TYPICAL LECTURE ROOM DETAIL

DRAWING STATUS		FOR APPROVAL	FOR EXECUTION
SCALE:	NTS		
DATE:	07/5/2026	CHECKED BY:	DK
DRAWN BY:	PV	APPROVED BY:	AT

DRG. NO: 2202-DAU-AT-AR-1001

DISCIPLINE: ARCHITECTURAL	SHT. NO.	NO.OF SHT.	REV. NO.
	002		R1